hansgrohe

Metropol Classic
3-hole basin mixer 110 with zero handles and pop-up waste set
Surfaces: **Chrome** Article Number: **31304000**

Description

product features

- consists of: 3-hole basin mixer, waste set
- ComfortZone 110
- projection 115 mm
- normal spray
- flow rate at 3 bar: 5 l/min
- ceramic valves hot/ cold 90°
- temperature limitation adjustable
- suitable for continuous flow water heaters
- pop-up waste set G 1¼
- material waste set: metal
- connection type: G ⅜ connections
- connection dimension: DN15

Technology

Air Power | Eco Smart | Quick Clean | Comfort Zone

Product image

Scale drawing

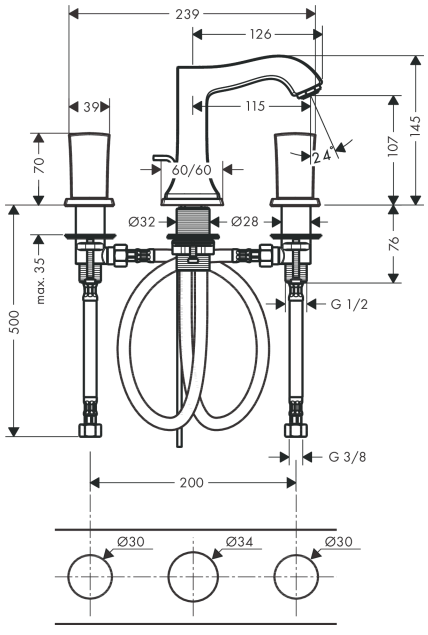

Flowchart

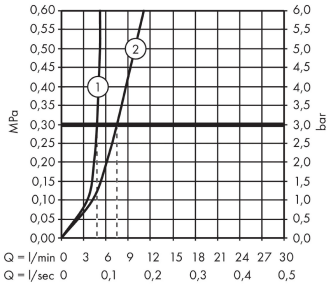

① with flow limiter
② without flow limiter